THIRD ANGLE PROJECTION ALL UNSPECIFIED DIMENSIONS IN MM DO NOT SCALE – WORK TO FIGURED DIMENSIONS ONLY IF IN DOUBT ASK

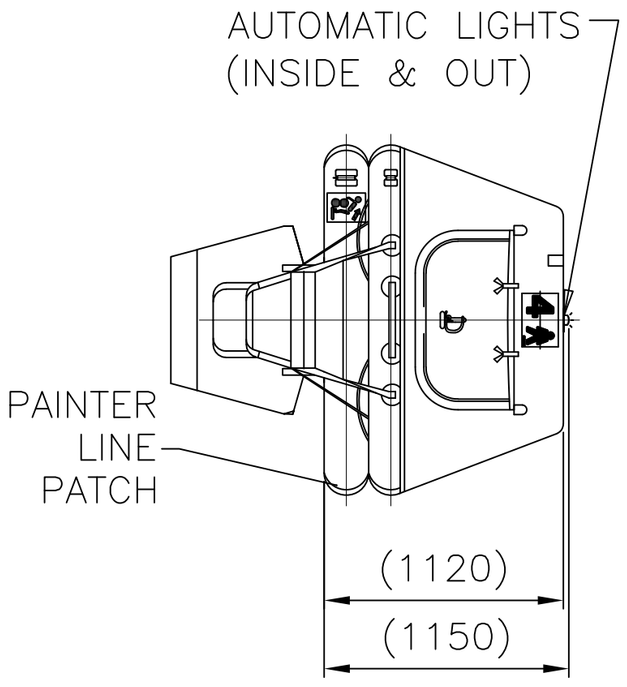

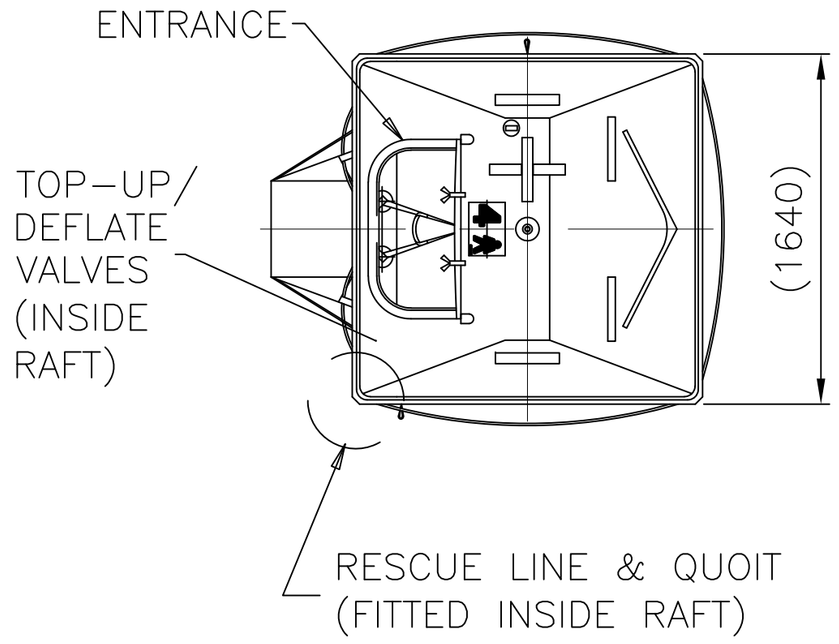

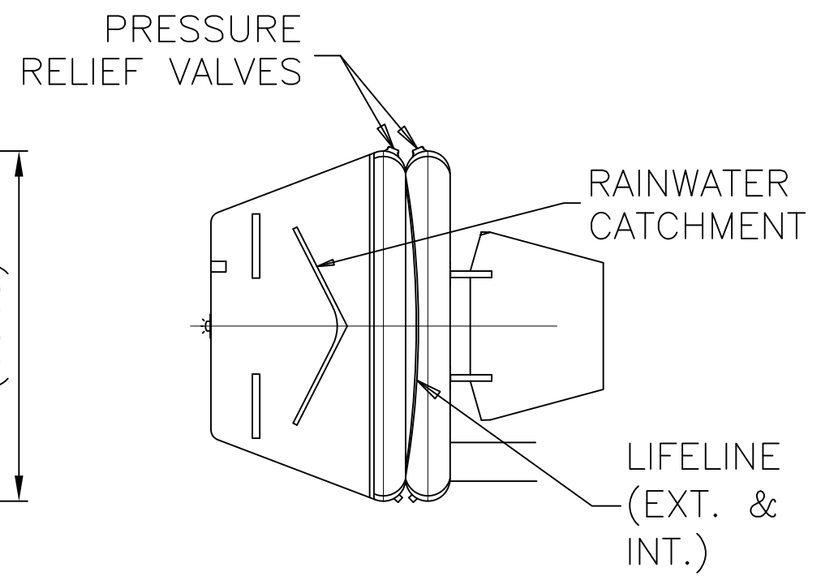

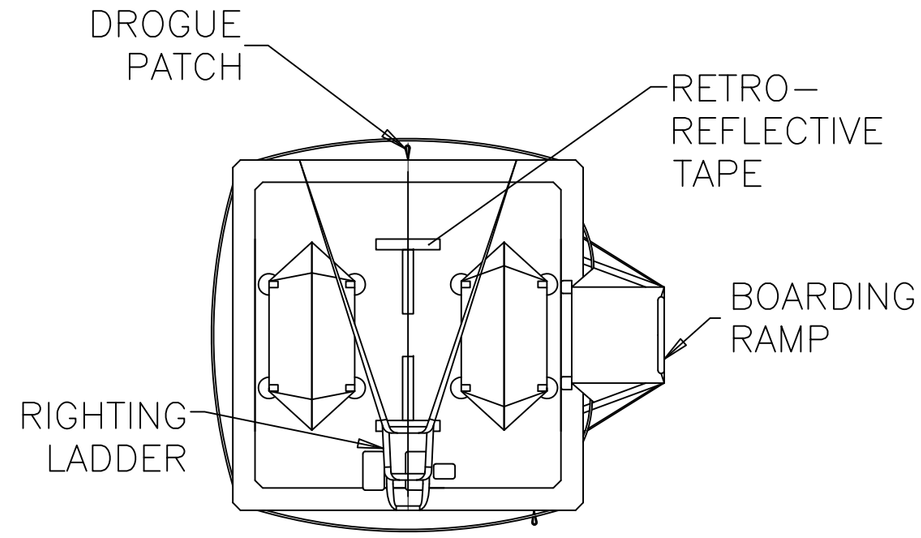

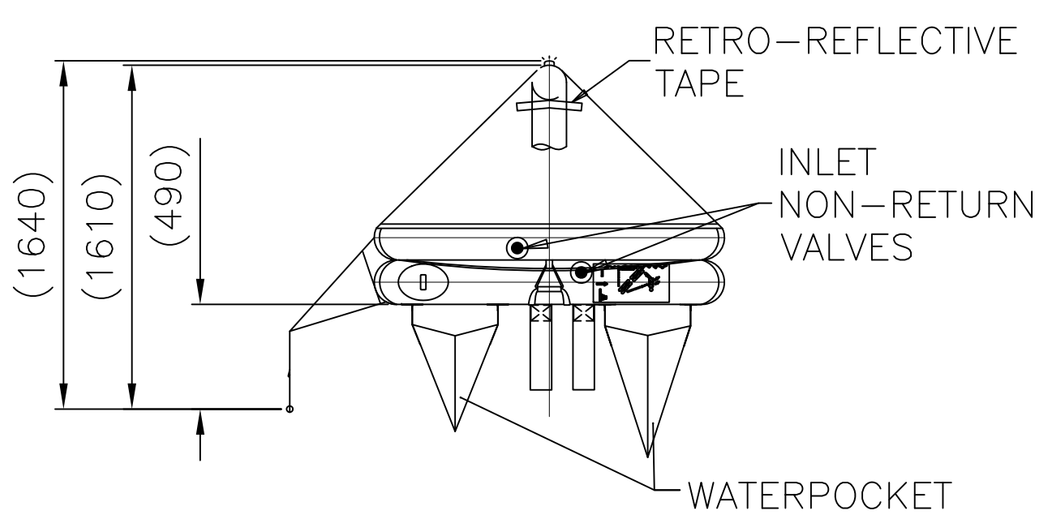

DESIGN DATA

CHAMBER	PANEL CIRCUMFERENCE	UNSTRETCHED TUBE DIAMETER	INCREASE IN DIA AT OPERATING PRESSURE	DIAMETER AT OPERATING PRESSURE	TUBE C/LINE LENGTH	NO. PANELS	VOLUME (m3)
UPPER BUOYANCY (ITEM 12)	620.0	197.35	5.5%	208.2	1433.0	4	0.20
LOWER BUOYANCY (ITEM 11)	620.0	197.35	5.5%	208.2	1433.0	4	0.20
ARCHTUBE (ITEM 16)	480.0	152.79	5.5%	161.2	2680.0	1	0.05

TOTAL BUOYANCY VOLUME @ OPERATING PRESSURE	0.39	m^3
MINIMUM BUOYANCY VOLUME REQUIREMENT = 0.096 x No. PERSONS (LSA CODE 4.2.3.1)	0.38	m^3
TOTAL AIR-HOLDING VOLUME @ OPERATING PRESSURE	0.45	m^3
USABLE FLOOR AREA @ OPERATING PRESSURE (AREA WITHIN INBOARD CENTRELINE OF LOWER BUOYANCY)	1.50	m^2
MINIMUM FLOOR AREA = 0.372 x No. PERSONS (LSA CODE 4.2.3.2)	1.49	m^2

VOLUMES LISTED ARE ASSUMING THAT AT OPERATING PRESSURE THERE IS MINIMAL AXIAL STRAIN AND HOOP STRAIN IS AS LISTED ABOVE

NOTES:

1. THIS DRAWING IS FOR REFERENCE ONLY. REFER TO SHEET 4 FOR MANUFACTURING DRAWING.
2. ALL DIMS ARE NOMINAL AT PRESSURE JUST GREATER THAN ATMOSPHERIC.
3. FEATURES NOT SHOWN; CANOPY INSULATION, KNIFE, FLOOR INSULATION, POSITION FOR RAFT MARKS (MAKER, SERIAL #, DATE OF MANUFACTURE, APPROVAL, SERVICE STATION NAME/PLACE OF LAST SERVICE, NO. OF PERSONS), POSITION OF SHIP IDENTIFICATION MEANS.

SURVITEC GROUP LIMITED OWNS THE COPYRIGHT OF THIS DRAWING, WHICH IS SUPPLIED IN CONFIDENCE. IT MUST NOT BE USED FOR ANY PURPOSE OTHER THAN THAT FOR WHICH IT IS SUPPLIED AND MUST NOT BE REPRODUCED EXCEPT UNDER AN AGREEMENT OR WITH THE CONSENT IN WRITING OF THE COMPANY. ©

survitec
KINGSWAY
DUNMURRY
BELFAST
N. IRELAND
BT17 9AF

DRG TITLE:	MARINE LIFERAFT 4–PERSONS (SURVIVA Mk4)				
SHT TITLE:	GENERAL ARRANGEMENT/DESIGN DATA – RFD SURVIVA MkIV 4TO				
PART No(s).	51326001	STATUS:	Released	DRG No. D51326	SHT 1 OF 7
CREATED BY:	welshh	PROJECT No.	DCS 2019–272 DCS 2021–029		SIZE: A2
THIS REV. BY:	Richard Kerrigan	FROM:	20/04/2021	REV 15	SCALE 1:40 U.O.S.